AQUADESIGN
MANUFACTURING

# **Solidwave** High-Low SWV3H/SWV3L

## Three User Lavatory System

| Dimensions | Water Use | Certifications | Technical | Barrier Free |
|---|---|---|---|---|
| 90" x 22" x 24" | 0.5 gpm | IAPMO Z124-2011<br>CSA B45.5-11<br>IAPMO IGC156<br>ASME A112.18.2-2011<br>CSA B125.2-11 | Drain: 1 ½"<br>Supplies: ½" IPS<br>Inlet Pressure: 20-100 psi | ADA<br>TAS<br>Alberta Building Code<br>Code Construction Québec |

### Material & Construction

The bowl is made from anti-microbial solid surface. Solid surface is a composite material of acrylic polyester polymer resins and aluminum trihydrate fillers. The material is resistant to stains and burns and complies with ANSI Z124.3. Solid surface cleans easily with Scotchbrite©, household cleaners or fine grit sandpaper. Solid surface is available in 15 colors.

The Solidwave High-Low includes heavy gauge stainless steel support brackets. The Solidwave High-Low is supplied with one chromed 1¼" brass grid strainer and overflow per bowl.

### Anti-microbial

The Solidwave High-Low bowl is manufactured with an anti-microbial agent. The agent is present both on the surface and on the inside of the material and will not dissipate or scratch off. In contact with moisture, anti-microbial ions will be released and effectively kill bacteria.

### Standard Equipment

Countertop in anti-bacterial solid surface material, steel mounting bracket, stainless steel skirt, and tail piece

### Optional Equipment

The Solidwave High-Low can be supplied with any of AquaDesign's faucets or can be drilled for faucets by others.

### LEED Compliance

The Solidwave High-Low contributes to meeting LEED requirements in the folloView categories:

WEp1 - Water Efficiency
WEc3 - Water Use Reduction

AquaDesign's faucets have a standard water usage of 0.5 gpm.

### Application

The Solidwave High-Low is intended for handwashing only. It is not to be used to dispense water for human consumption either by drinking or use in the preperation of food or beverages.

### Warranty

Warranty: 5 years limited warranty on material and 1 year limited warranty on components.

### SAMPLE SPECIFICATION

Fixture shall be AquaDesign Solidwave High-Low three user hand wash station. Countertop is made from anti-microbial solid surface.

The unit is furnished with a Line12/Line13/Line14/Line70/Omnia faucet.

**WARNING:** Cancer and Reproductive Harm
www.P65Warnings.ca.gov

## Top Views

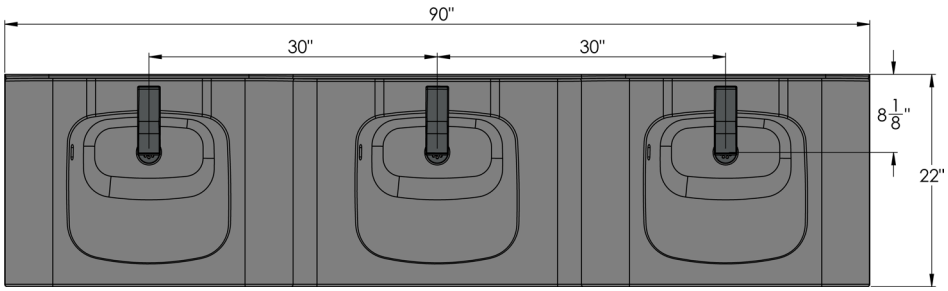


Low-High-Low

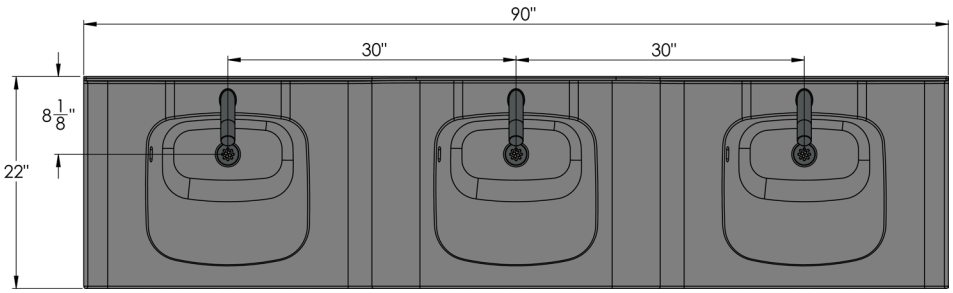


High-Low-High

## Front Views

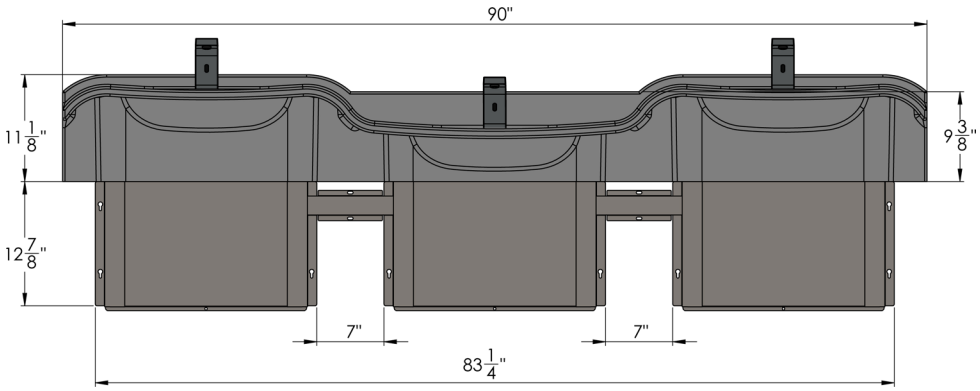


High-Low-High

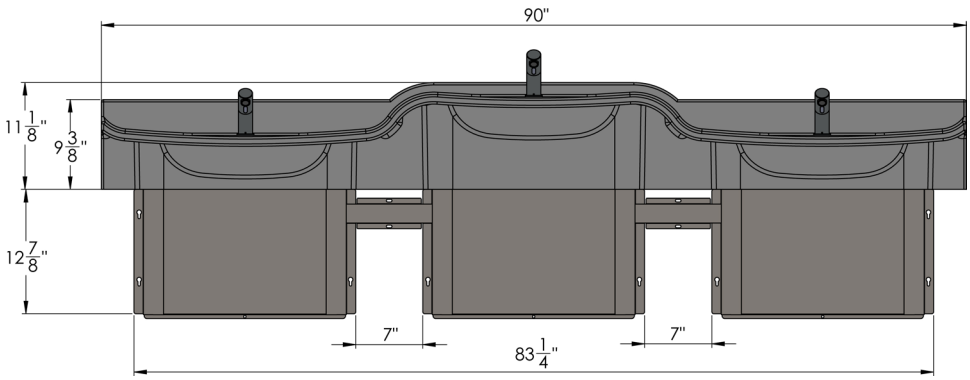


Low-High-Low

## Side View

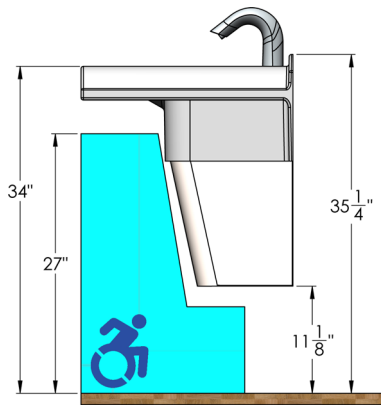


High Side

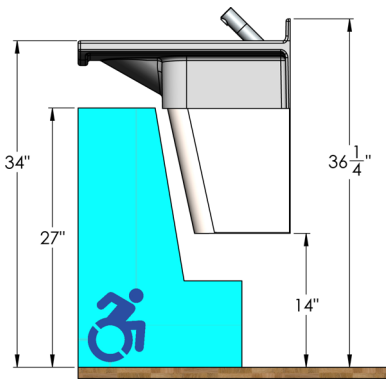


Low Side

## Rough-In Dimensions - SWV3L

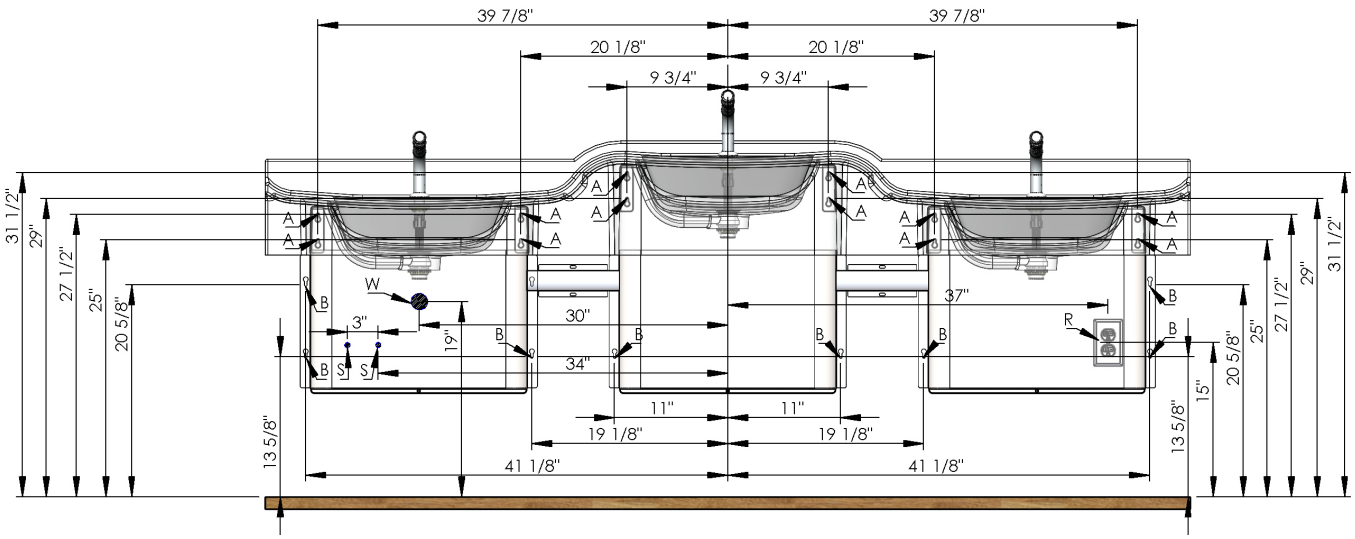


**Notes:**

1. Electrical receptacle must be wired to a GFCI protected circuit. Fixture must be earth grounded.
2. Consult local electrical code for need and use of extra electrical conduit box.
3. All height measurements are measured from the FINISHED floor.

| Code | Description |
|---|---|
| A | 3/8” Anchors |
| W | 1-1/2” NPT Drain |
| S | 1/2” Hot Water Supply |
| S | 1/2” Cold Water Supply |
| R | 120V Receptacle |

## Height Adjustments

| Standard | Rim Height | Adjustment of A, B& W |
|---|---|---|
| ADA & TAS Adult | 34” | None |
| ADA Juvenile, Age 6-12 | 31” | Subtract 3” from height in drawing |
| TAS, Grades 6 through 8 or 9 | 32” | Subtract 2” from height in drawing |
| TAS, Grades Pre-K through Grades 5 or 6 | 30” | Subtract 4” from height in drawing |
| Alberta Building Code | 865 mm | None |
| Code de Construction Québec | 865 mm | Aucune |

## Rough-In Dimensions - SWV3H

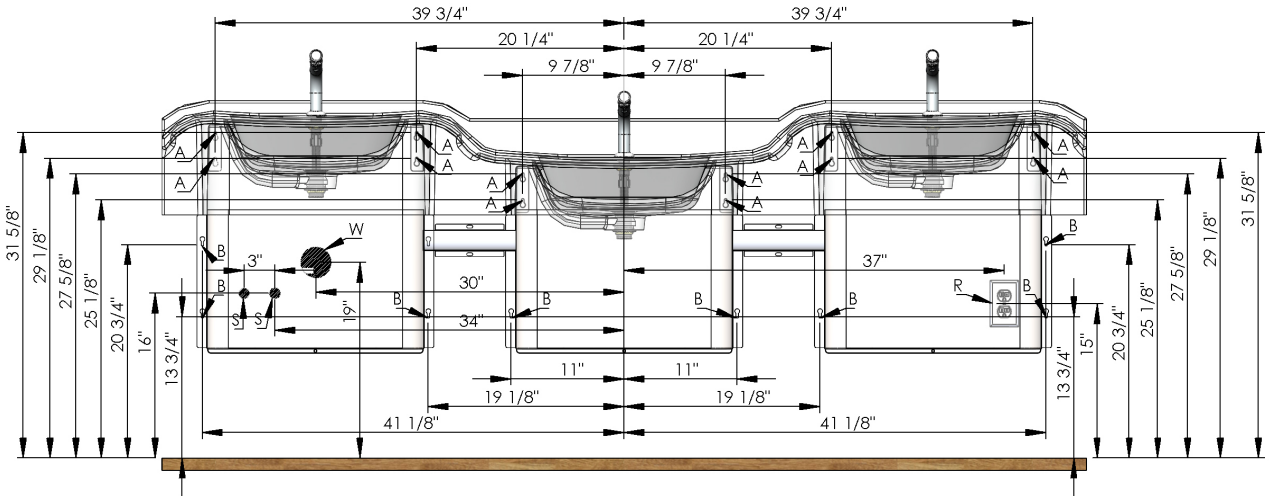


**Notes:**
1. Electrical receptacle must be wired to a GFCI protected circuit. Fixture must be earth grounded.
2. Consult local electrical code for need and use of extra electrical conduit box.
3. All height measurements are measured from the FINISHED floor.

| Code | Description |
|---|---|
| A | 3/8” Anchors |
| W | 1-1/2” NPT Drain |
| S | 1/2” Hot Water Supply |
| S | 1/2” Cold Water Supply |
| R | 120V Receptacle |

## Height Adjustments

| Standard | Rim Height | Adjustment of A, B& W |
|---|---|---|
| ADA & TAS Adult | 34” | None |
| ADA Juvenile, Age 6-12 | 31” | Subtract 3” from height in drawing |
| TAS, Grades 6 through 8 or 9 | 32” | Subtract 2” from height in drawing |
| TAS, Grades Pre-K through Grades 5 or 6 | 30” | Subtract 4” from height in drawing |
| Alberta Building Code | 865 mm | None |
| Code de Construction Québec | 865 mm | Aucune |

| 001 | **Base Model Number** (must specify) | |
|---|---|---|
| ❒ | SWV3H | Three User High-Low - High Model |
| ❒ | SWV3L | Three User High-Low - Low Model |

| 002 | **Operation** (must specify) | |
|---|---|---|
| ❒ | -L12 | Line 12 Sensor Faucet |
| ❒ | -L13 | Line 13 Sensor Faucet |
| ❒ | -L14 | Line 14 Sensor Faucet |
| ❒ | -OMW | Omnia Sensor Faucet |
| ❒ | -OML | Omnia Water & Soap Sensor Faucet |
| ❒ | -L70 | Line 70 Pushbutton Faucet |
| ❒ | -DEK | No Faucets |

| 003 | **Supply** (must specify with faucets) | |
|---|---|---|
| ❒ | -TEM | Tempered or Cold Water |
| ❒ | -TMV | Thermostatic Mixing Valve |

| 004 | **Color** (must specify) | |
|---|---|---|
| | Standard Colors | |
| ❒ | -AB | Adobe Brown |
| ❒ | -AW | Ash White |
| ❒ | -BF | Black Forrest |
| ❒ | -CO | Concrete Grey |
| ❒ | -ES | Egyptian Sand |
| ❒ | -MB | Midnight Blue |
| ❒ | -MG | Misty Grey |
| ❒ | -PB | Pearl Black |
| ❒ | -PW | Polar White |
| ❒ | -SA | Sandstone |
| ❒ | -TG | Twilight Grey |
| | Designer Colors | |
| ❒ | -BB | Belgian Blue |
| ❒ | -MQ | Montreal Quartz |
| ❒ | -PS | Paris Stone |
| ❒ | -SR | Sydney Rock Oyster |

| 005 | **Soap Options** (for Models Without Skirt Only) | |
|---|---|---|
| ❒ | -SD7 | Line 12 Soap Dispenser |

| 006 | **Faucet Options** | |
|---|---|---|
| ❒ | -HW | Low Voltage Class II Plug-In Transformer (1 per faucet) |
| ❒ | -CS | Hole Drilling for Center Set Faucets |
| ❒ | -4C | Hole Drilling for 4” Center Faucets |
| ❒ | -8C | Hole Drilling for 8” Center Faucets |

**Approved by:**

Name: _____

Title: _____

Signature: _____

Date: _____

All information including dimensions, changes in design and material are subject to manufacturer’s change without formal notice and without obligation. AquaDesign assumes no responsibility for use of superseded or voided information. Verify all rough-in information before installation. It is the responsibility of the installer to conform with local and national codes.