AQUADESIGN
MANUFACTURING

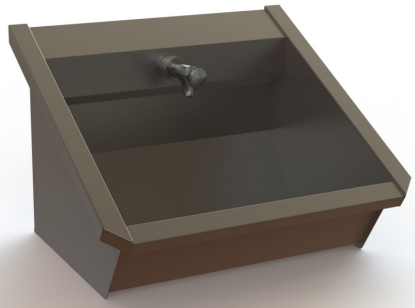

# **Wash Basin** - Series 1 11

## Single User Wash Basin

| Dimensions | Water Use | Technical | Barrier Free* |
|---|---|---|---|
| $24^{3/8}$" x 18" x $16^{7/8}$" | 0.35 - 2 gpm | Drain: 1 ½"<br>Supplies: ½"<br>Inlet Pressure: 17 to 80 psi | ADA<br>TAS<br>Alberta Building Code<br>BC Building Code<br>Code Construction Quèbec<br>*M4 &M12 faucets or no faucets only |

### Material & Construction

The wash basin is constructed of type 304 stainless steel, with a #4 satin finish. The sides are the wash basin are 16 gauge, the basin is 19 gauge. The sidewalls of the wash basin are seamlessly welded from within. The benefit to the elimination of any interior seams is that it removes hidden locations where bacteria can form. To assist in maintaining the wash basin, it has been designed without any horizontal surfaces for unsightly water to collect. All interior corners of the basin are more than 90 degrees, which promotes rapid drainage to the center of the basin.

The drain strainer is fully seamless and is an integral part of the wash basin.

When faucets are supplied they will be pre-assembled on the wash fountain.

### Water Activation

The wash basin can be supplied with a wide range of faucets with different kinds of activation.

### Soap

The wash basin can be supplied with a bracket for mounting soap dispensers (-A3).

A sensor foam soap option is also (-S15) available.

### Application

The Series 1 Wash Basin is intended for handwashing only. It is not to be used to dispense water for human consumption either by drinking or use in the preperation of food or beverages.

### LEED Compliance

The wash basin with the M15 sensor faucet contributes to meeting LEED requirements in the following categories:

WEp1 - Water Efficiency
WEc3 - Water Use Reduction

### Warranty

5 years limited warranty on material and 1 year limited warranty on components.

**WARNING:** Cancer and Reproductive Harm
www.P65Warnings.ca.gov

## Top View

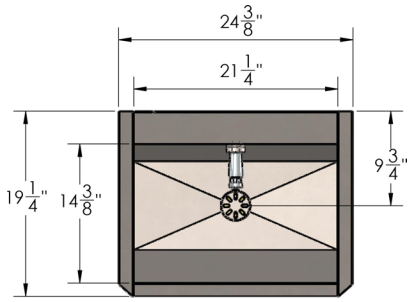


## Front View

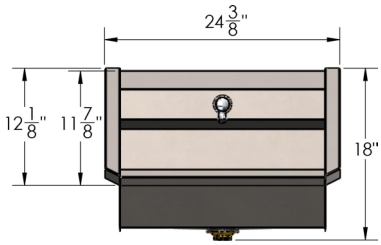


## Side View

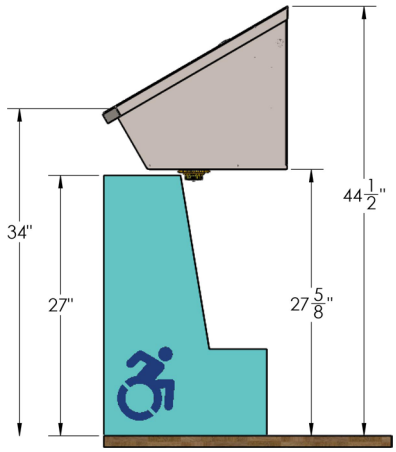

## Rough-In Dimensions

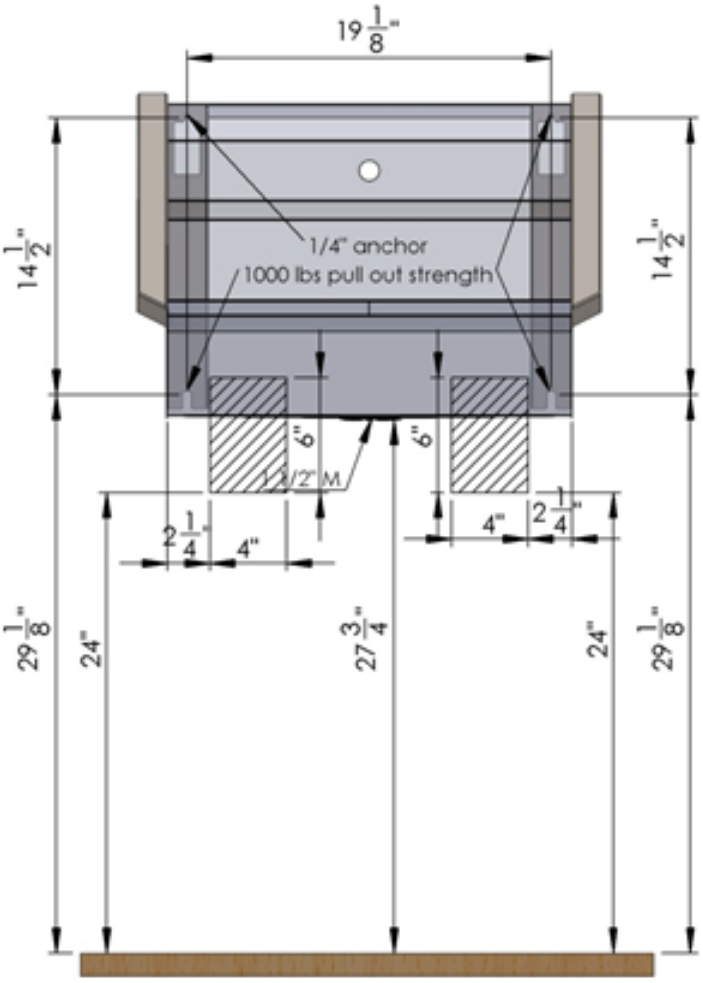


**Notes:**
1. Electrical receptacle must be wired to a GFCI protected circuit. Fixture must be earth grounded.
2. Consult local electrical code for need and use of extra electrical conduit box.
3. All height dimensions are measured from the FINISHED floor

## Height Adjustments

| Standard | Rim Height | Adjustment of A, B& W |
|---|---|---|
| ADA & TAS Adult | 34” | None |
| Alberta and BC Building Code | 865 mm | None |

## Faucet Options

### -M1 Faucet

The M1-faucet is a cold or tempered water faucet. The spout is made of chromed brass. Activation of the faucet is done by turning the end of the spout one quarter turn.

### -M2 Faucet

The M2-faucet is a cold or tempered water faucet. The faucet has a ceramic cartridge.

### -M70 Faucet

The M70-faucet is a push button metering faucet. The water is set to run for 11 seconds and the run time can be adjusted. The faucet does not comply with ADA for activation.

### -M4 Faucet

The M4-faucet is a cold or tempered water faucet. The faucet has a blade handle and complies with ADA for activation

### -M5 Faucet

The M5-faucet is a hot and cold water mixing faucet. The hot and cold water can be operated seperately.

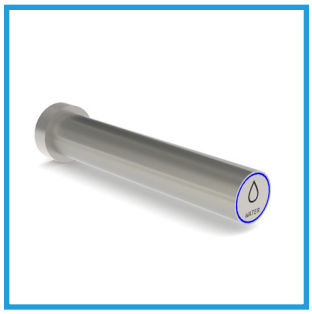

### -M15 Faucet

The M15-faucet is stainless sensor activated faucet activated by concealed sensor built into the spout. Includes a low battery indicator. The faucet comes standard with a plug-in transformer.

## Sensor Soap Option

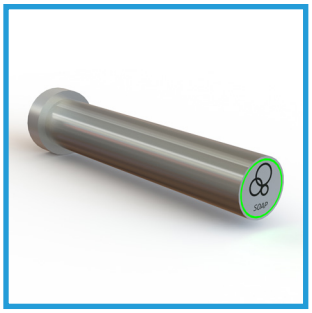

### -S15 Soap Dispenser

The -S15 sensor soap dispenser is activated by concealed sensor built into the spout. Includes a low battery indicator. The dispenser has a refillable 1 qt reservoir and dispenses foam soap.

| | | | |
|---|---|---|---|
| 001 | **Base Model Number** (must specify) | | |
| | ❒ | 11 | Single User Line 1 Wash Basin |
| 002 | **Faucet** (must specify) | | |
| | ❒ | -Z01 | No Faucet, No Supply Line |
| | ❒ | -M01 | Quarter Turn Faucet |
| | ❒ | -M02 | Cold Water Faucet |
| | ❒ | -M70 | Pushbutton faucet |
| | ❒ | -M04 | Wristblade Faucet |
| | ❒ | -M05 | Hot & Cold Water Faucet |
| | ❒ | -M15 | Sensor Operated Faucet |
| 003 | **Soap Options** | | |
| | ❒ | -A3 | Bracket for Soap Dispenser (one piece) |
| | ❒ | -S15 | Sensor Soap Dispenser |
| 004 | **Other Options** | | |
| | ❒ | -TMV | Thermostatic Mixing Valve |

**Approved by:**

Name: _____

Title: _____

Signature: _____

Date: _____

All information including dimensions, changes in design and material are subject to manufacturer's change without formal notice and without obligation. AquaDesign assumes no responsibility for use of superseded or voided information. Verify all rough-in information before installation. It is the responsibility of the installer to conform with local and national codes.